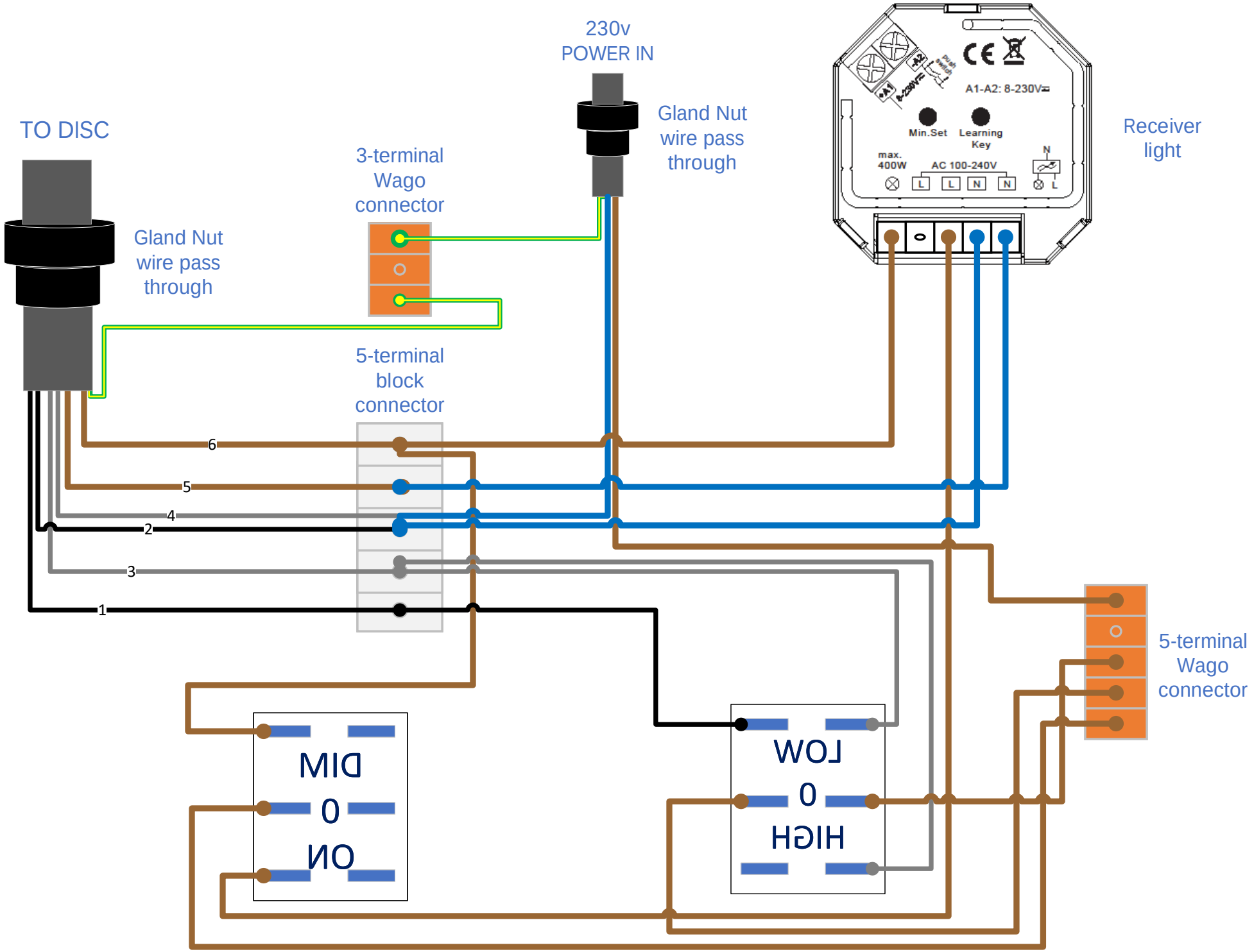
TO DISC
Gland Nut wire pass through
3-terminal Wago connector
230v POWER IN
Gland Nut wire pass through
Receiver light
A1-A2: 8-230V
Min.Set
Learning Key
max. 400W
AC 100-240V
L
L
N
N
N
L
5-terminal block connector
6
5
4
2
3
1
5-terminal Wago connector
DIM
0
ON
LOW
0
HIGH